Installation and operating instructions EN

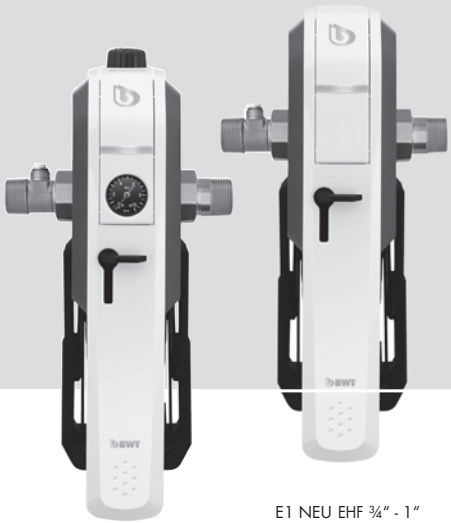

E1 NEU HWS ¾" - 1"

E1 NEU EHF ¾" - 1"

BWT E1 NEU ¾"-1" (DN 20-25)

EHF Single-lever filter / HWS domestic water station

Important notice: Always keep the fitting and operating instructions close at hand to avoid any mistakes and before carrying out any work on the device you should read the fitting and operating instructions carefully and follow them. While ourdata sheets and brochures should provide advice to the best of our knowledge, the content thereof is not legally binding. In addition to this, our general terms and conditions of trade apply.

Subject to alterations!

BWT
BEST WATER TECHNOLOGY

Thank you very much for the confidence that you have shown in us by purchasing a BWT appliance.

EN Table of contents

Contens

1.Scope of supply 5

2.Purpose 5

2.1 Filtration 5

2.2 Pressure reducer (only E1 NEU HWS) 5

3.Function 5

3.1 Filtration 5

3.2 Pressure reducder + backflow preventer (only E1 NEU HWS) 5

4.Installation pre-requisites 5

5.Installation 6

5.1 Check the direction of flow and change if necessary 6

5.2 Install filter 6

5.3 Install wall mounting 6

6.Commissioning 6

6.1 Set pressure reducer (only E1 NEU HWS) 6

7.Operation 7

7.1 Replace filter 7

8.Reminder service 7

9.Operators' obligations 8

10.10-year E1 guarantee 8

11.Warranty 8

12.Rectification of defects 9

13.Standards and legal provisions 9

14.Maintenance instructions 9

15.Technical data 10

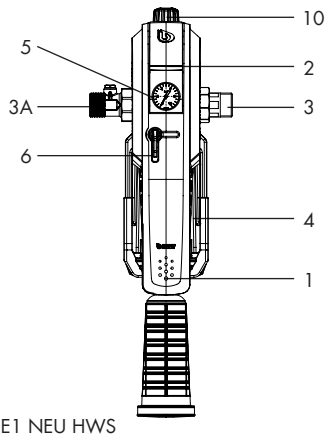

Fig. 1 - E1 NEU HWS

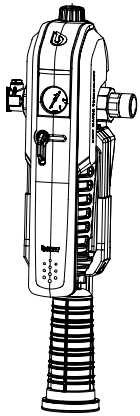

Fig. 2 - E1 NEU HWS

Fig. 3 - Hygienic vault (filter cup + filter element) in the black supporting core

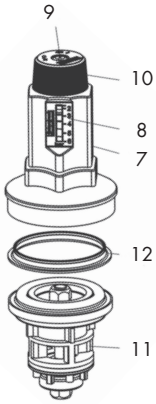

Fig. 4 - Pressure reducer functional unit only E1 NEU HWS

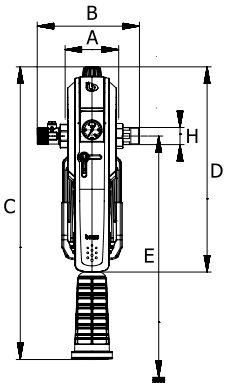

Fig. 5 - E1 NEU HWS

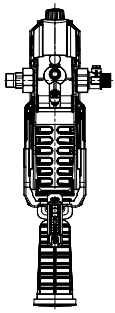

Backview E1 NEU HWS

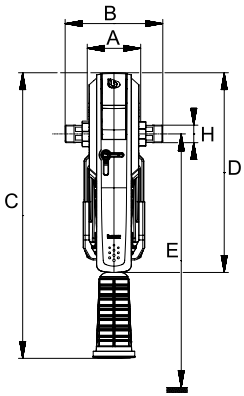

E1 NEU EHF

1. Scope of supply

E1 NEU consisting of:
1 Lever (handle)
2 Cap
3 Connection screw joints and seals
3A Connection screw joints and seals, with a backflow preventer on the input side (with control screw or facility for the connection of an inlet pressure gauge, only E1 NEU HWS)
4 Supporting core incl. hygienic vault (= filter cup + filter element)
5 Back pressure manometer (only E1 NEU HWS)
6 Stopcock/unlocking device

Pressure reducer (only E1 NEU HWS, Fig. 4) consisting of:
7 Spring cap
8 Display for back pressure setting value
9 Locking screw
10 Rotary knob for pressure reducer
11 Pressure reducer element
12 Slide ring

To be ordered separately:
Replacement filter element (in pack of 2)
- Order number DE: 10386 (100 µm)
- Order number AT: 810386 (100 µm)

Filter element change every 6 months!

Or for optimum hygiene: hygienic vault = filter cup + filter element + individually packaged lid, Replacement without touching components exposed to water.
- Order number DE: 20393 (100 µm)
- Order number AT: 820393 (100 µm)

Hygienic vault change every 12 months!

2. Purpose

2.1 Filtration
The BWT E1 NEU is intended for the filtration of drinking and service water. It protects the water pipes and the connected water-bearing system components from functional defects and corrosion damage by foreign particles such as rust particles, shavings, sand, hemp, etc. The filter cannot be used with chemically treated circulation water, process water and cooling water for flow cooling. A coarse dirt separator must be installed upstream for waters with coarse dirt particles. The filters are not suitable for oils, fats, solvents, soaps and other lubricating media. Neither are they suitable for the separation of water-soluble substances.

2.2 Pressure reducer (only E1 NEU HWS)
The integrated pressure reducer installed downstream from the filter serves to reduce pressure and regulate a desired back pressure, predominantly in the domestic water supply plant. It keeps the regulated back pressure almost constant, even when the pre-pressure fluctuates between, for example, 16 bar and the set back pressure, e.g. 3 bar. A uniform, not too high pressure preserves fittings and devices in the entire domestic water installation, helps to save up to 50 % of water and minimises noise evolution. We recommend the installation of a pressure reducer from 4 bar pre-pressure.
Caution: The plant must be set up according to the installation and operating instructions of the AVB Water V, Sec. 12.2. by the water supply company or an installation company entered into the installer directory of a water supply company.

3. Function

3.1 Filtration
The raw water flows through the raw water inlet into the filter and then from the outside to the inside through the filter element to the pure water outlet. The foreign particles larger than the filter rating are retained on the outside of the filter fabric. Clean water enters into the pipeline system.
If as a result of the increasing contamination of the filter fabric the water pressure decreases perceptibly, the filter element must be replaced. BUT AFTER 6 MONTHS AT THE LATEST!

3.2 Pressure reducer + backflow preventer (only E1 NEU HWS)
The pressure reducer works according to the principle of the relieved single-seat valve. It is controlled starting from the back pressure via a large-dimensioned membrane and a pressure spring, the tension and thus the back pressure of which can be changed with the rotary knob (11). The display (5) shows the respective back pressure setting value. The backflow preventer only opens in the direction of flow when water is removed and is tightly sealed in idle position or counterpressure.

4. Installation pre-requisites

Heed local installation regulations, general guidelines and technical data. Install filters in cold water pipes upstream from the objects to be protected.
Caution: The installation site must be frostproof and avoid disruptive influences (e.g. solvent vapours, heating oil, washing alkalis, all kinds of chemicals, UV radiation and heat sources above 40 °C).

Caution: keep plastic components free from oil and fat, solvents and acids and base cleaners.

5. Installation

5.1 Check the direction of flow and change if necessary

In the delivery state the direction of flow is from left to right (heed flow direction arrow – visible on the brass body below the handle). It is possible to change this prior to filter installation – without connection screw joints and manometer:

- Turn stopcock/ unlocking device (6) to the 'open' position (90° clockwise)
- Open lever (1) by approx. 80° - 90°

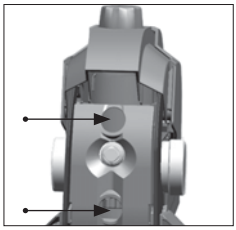

- Remove the black cover on the reverse of the filter
- Loosen bolt (anti-rotation device)

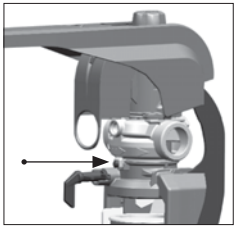

- Rotate the brass housing by 180°

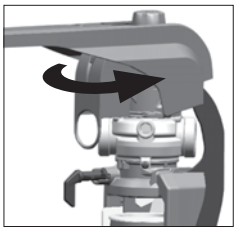

- Reinsert the bolt (anti-rotation device)

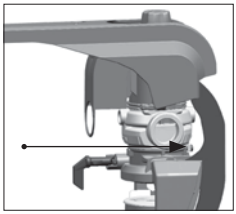

The direction of flow is now from right to left.

5.2 Install filter

Mount the screw connection including the flat gasket enclosed with the filter – the screw connection with the backflow preventer must be positioned on the input side (only E1 NEU HWS). Seal the manometer (5) which is also enclosed (only E1 NEU HWS). Then install the filter according to the nominal width into the similarly dimensioned cold water pipe and upstream from the objects to be protected.

5.3 Install wall mounting

The wall mounting is pre-installed on the filter. It is fixed to the wall using the supplied bolts and dowels (2 x KA40 or Ø 6 mm) in the wall.

- Installation of wall mounting only after installation of the filter
- Distances for installation of wall mounting according to the sketch
- Caution: If filter * is closed, then position above in wall mounting.

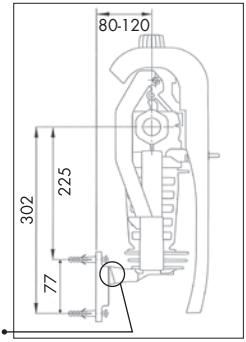

- A hygienic vault (filter cup + filter element + lid) can be suspended in the mounting

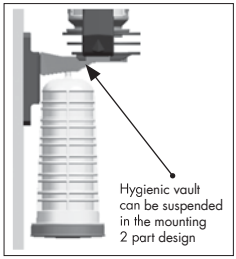

- The distance from the wall varies between 80 - 120 mm. Two-part wall mounting.

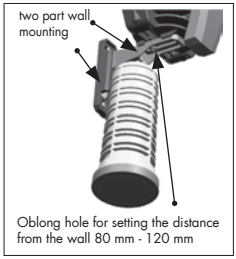

6. Commissioning

Check filter for proper installation.

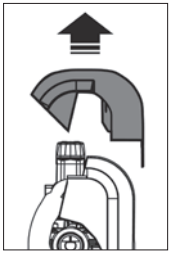

6.1 Set pressure reducer (only E1 NEU HWS)

The pressure reducer is under the cap.

Simply remove the cap (2) to reach the pressure reducer. The pressure reducer is set to a back pressure of 4 bar at the factory. To change the back pressure, loosen the locking screw (10) and turn the rotary knob (11). The back pressure can be changed by turning the setting knob (11) (control range 2 - 6 bar).

Clockwise rotation = higher back pressure.
Anti-clockwise = lower back pressure.

The manometer (5) displays the back pressure. During setting, an outlet valve downstream from the pressure reducer must be briefly opened and closed again a number of times. When water is removed, the back pressure is temporarily reduced. The back pressure must not exceed 80 % of the response pressure of the hot water safety valve (DIN 1988-200).

7. Operation

The filter and pressure regulation functions work completely autonomously without the need for operation. For impeccable, hygienic enjoyment of drinking water in accordance with the standards, it is only necessary to replace the filter element at least every 6 months.

7.1 Replace filter

With the new single lever operation, replacing the filter element is easy and only takes seconds:

1. Slowly unlock the stopcock (6), thus simultaneously and automatically stopping the water (A1).
   Note: The stopcock (6) is for maintenance purposes only, i.e. for replacing the filter element. It is not intended as the main shut-off for the water supply.

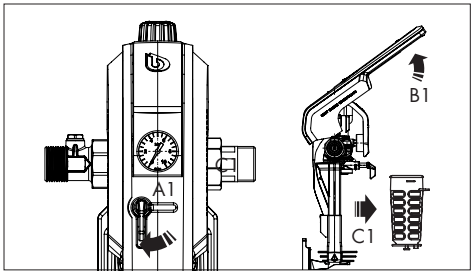

2. Lift the single lever to approx. 130° (B1) – Pull out the supporting core, incl. filter cup and filter element (C1).

3. Dispose of the used filter element or – for optimum hygiene – the complete hygienic vault (environmentally-friendly plastic recycling).

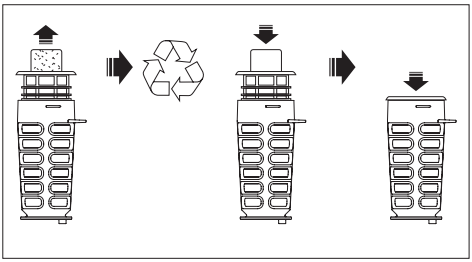

4. Insert the new filter element or hygienic vault (A2), close the lever (B2). Slowly release the stopcock/ unlocking device (6) (90° anti-clockwise) (C2).

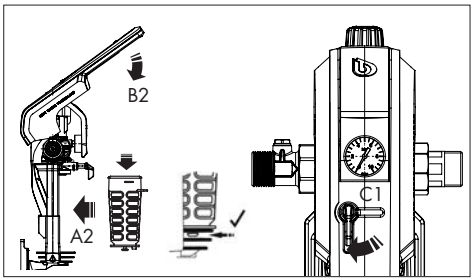

8. Reminder service

With the BWT reminder service, BWT's maintenance information service will remind you on a regular basis when it is time to change the filter element and also provide important hints and tips on hygiene. In combination with the reminder service and the regular change of the filter element or hygiene kit, an extended 10-year E1 guarantee is available, depending on the national subsidiary (see item 10).

9. Operators' obligations
According to German legislation

You have purchased a durable and service-friendly product. However, all technical plants require regular servicing to keep them in perfect working order. The pre-requisite for functioning and the warranty is the replacement of the filter element and the visual inspection for leakproofness by the operator.
Verification of initial pressure every 2 months in the case of zero flow and high levels of water removal.

A further pre-requisite for functioning and the warranty is replacing wearing parts at the prescribed maintenance intervals (see '12. Maintenance instruction').

In accordance with DIN EN 806-5, wearing parts must be replaced by experts (installer or factory service centre).
We recommend entering into a maintenance contract with your installer or factory service centre.

Note: Filters should not be operated by children. Squeezing of the hand/fingers is possible.

Qualified staff:
The product may only be installed, commissioned and serviced by skilled personnel. Only trained persons are allowed to operate and use it.

Trained person:
Has received instruction and studied the information in this document concerning the tasks entrusted to him/her, and the possible risks in the event of inappropriate behaviour.

Skilled personnel:
Based on the professional training received, knowledge and experience, and knowledge of the relevant definitions, is qualified to install the product, to commission and to service it.

10. 10-year E1 guarantee

Depending on the BWT national subsidiary, a 10-year guarantee is available for the new E1 filter.
The following prerequisites must be met:

- installation by a qualified expert
- proper operation
- registration (for details see www.bwt-service.com)

11. Warranty

In the event of breakdown during the warranty period, where a maintenance contract exists please contact our factory service centre, specifying the type of device (see technical data or type plate on the device). Work under warranty may only be executed by our factory service centre. Works performed under warranty by a specialist firm require explicit commissioning by our customer service department. If no maintenance contract exists, please contact your in-house installer.

12. Rectification of defects

Defect	Cause	Rectification
Water pressure in network sharply reduced; water pressure falls sharply upon removal (by more than 35 % of resting pressure)	Filter element soiled	Replace filter element/hygienic vault
Water pressure increases above the set value	Replacement or wear of sealing elements	Readjust back pressure (see Commissioning). If the pressure increases further the valve element (12) must be replaced (only E1 NEU HWS)

If the defect cannot be rectified with the aid of this information, the factory service centre must be contacted..

13. Standards and legal provisions
in the most recent version in each case

The filter was manufactured in compliance with DIN EN 13443-1 "Mechanical filters and filter combinations in the drinking water installation".

The following must be heeded when installing and operating the filter:
- DIN EN 806, Technical regulations for drinking water installations
- DIN 1988-200, Technical regulations for drinking water installations
- Regulation on the quality of water for human consumption (drinking water regulation)
- Act on Regulation of the Water Household (WHG)
- Act for promoting closed substance cycle waste management and ensuring environmentally compatible waste disposal (Closed Substance Cycle and Waste Management)
- The relevant regulations for installation, operation and maintenance

14. Maintenance instructions

Drinking water is a foodstuff.
Hygienic care in the execution of works should therefore be self-evident.
In accordance with DIN EN 806-5, maintenance must be performed by experts (installer or factory service centre).

Replacement of wearing parts (only original spare parts)

Seals	every 3 yrs
Pressure reducer element (12)	every 6 yrs
Manometer (6)	every 6 yrs

Verification of initial pressure with zero flow and high levels of water removal.

Replacement of pressure-reducing element (only E1 NEU HWS)

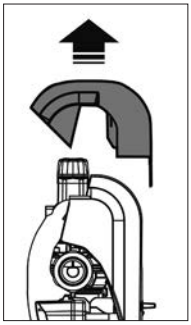

Pressure reducer is located under the cap (2). After stopping the flow of water loosen locking screw (10) and turn rotary knob (11) in an anticlockwise direction until latching. Screw off spring cover (8) with a ring wrench (wrench width 36). Remove pressure-reducing element (12) and slide ring (13).
Grease O-rings of the new valve element with silicone grease and insert the valve element into the casing, heeding the correct fit of the O rings. Insert slide ring, screw in spring cover and locking screw. (tightening torque 35 - 40 N/m) Set pressure reducer as described under Commissioning. Check all connections for leakproofness (visual inspection).

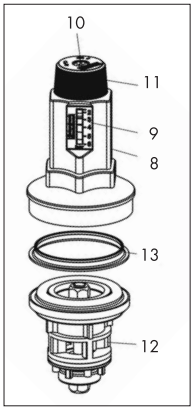

Warning: Any guarantee / warranty is void if the hygiene safe is damaged, e.g. mechanically (hygienic vault falls on the floor) or thermal (stored under -25 °C / over 40 °C temperature or is constantly exposed to intense sunlight). Do not wash the filter element and hygienic vault in the dishwasher! It must be used only factory-new hygienic vaults, BWT replaced damaged parts free of charge: www.bwt-group.com.

15. Technical data

BWT E1 NEU Single-lever filter		Typ	EHF ¾“ (1“)	HWS ¾“	HWS 1“
Nominal width		DN	20	20	25
Connection thread	H		¾" (and 1")	¾"	1"
Swivel nut thread			G 1 ¼“	G 1 ¼“	G 1 ¼“
Admission width		µm	90-110	90-110	90-110
Flow rate at Δp = 0,2 bar**		m^3/h	1,6	-	-
Flow rate at Δp = 0,5 bar**		m^3/h	2,3	-	-
Flow rate with reducing valve*		m^3/h	-	2,3	3,6
Output pressure after pressure reducing valve		bar	-	2-6	2-6
Nominal pressure (PN)		bar	16	16	16
Operating pressure, min./max.		bar	2/16	2/16	2/16
Water temperature, min./max.		°C	5/30	5/30	5/30
Ambient temperature, min./max.		°C	5/40	5/40	5/40
Overall length without fitting	A	mm	100	100	100
Overall length with fitting	B/B1	mm	185	197	199
Total hight E1 NEU EHF/HWS incl. hygienic vault	C/C1	mm	551	569	569
Total hight E1 NEU EHF/HWS	D/D1	mm	381	399	399
Minimum distance pipe centre to floor	E	mm	480	480	480
Installation mass pipe centre to wall		mm	80-120	80-120	80-120
Approx. operating weight		kg	3,5	4,0	4,0
Item Nr. AT			840382	840384	840385
Item Nr. DE			40382	40384	40385
EAN			9022000403828	9022000403842	9022000403859

* according to DIN EN 1567

** according to DIN EN 13443-1

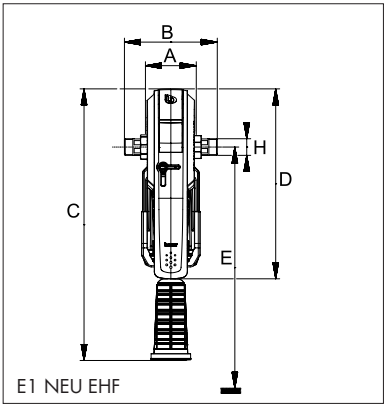

E1 NEU EHF

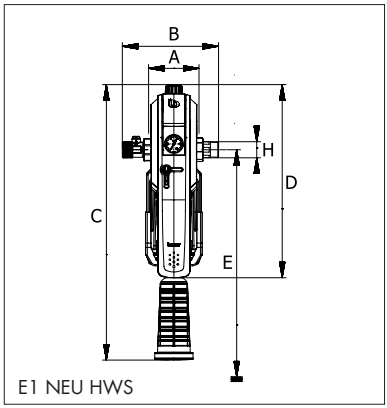

E1 NEU HWS

Further information:

BWT UK Limited
Suite G, Artisan, Hillbottom Road,
High Wycombe, Buckinghamshire,
HP12 4HJ
United Kingdom
Phone: +44 1494 838100
E-Mail: enquiries@bwt-uk.co.uk

www.bwt.com

BWT
BEST WATER TECHNOLOGY