Installation and operating manual EN

BWT PerlaMAXX

10, 20

Important notice: Always keep the fitting and operating instructions close at hand to avoid any mistakes and before carrying out any work on the device you should read the fitting and operating instructions carefully and follow them. While our data sheets and brochures should provide advice to the best of our knowledge, the content thereof is not legally binding.

EU-OPM / 2025-09 / © BWT UK Ltd. Changes of technical details are reserved

BWT
BEST WATER TECHNOLOGY

This water softener complies with all relevant local and national safety requirements. Improper use will invalidate your manufacturer's warranty and could lead to injury and material damage.

To help avoid the risk of accidents and unnecessary damage to this device, please read these instructions carefully before installation and use. Please keep these instructions in a safe place and ensure that they are passed on to any future user of the device.

EN

Table of contents

1. Introduction 4

1.1 General comments 4
1.2 Manufacturer 4
1.3 Safety instructions 4
1.4 Intended use 4
1.5 Scope of delivery 5

2. Quick Operation 7

2.1 Display and control elements 7
2.2 Standard factory settings 7
2.3 Programming procedure 8
2.4 Display Key 10

3. Installation 12

3.1 Installation requirements 12
3.2 Initial commissioning 13
3.3 Installation and operation considerations 13
3.4 Installation Layout 15
3.5 Technical overview of device 16
3.6 Installing your softener 17

4. Operation 18

4.1 Function 18
4.2 Operation 18
4.3 Setting the hardness of blended water 20

5. Maintenance 20

5.1 Maintenance work 20
5.2 Operator responsibilities 20
5.3 Maintenance & wearing parts 20
5.4 Disposal 20

6. Fault finding 21

6.1 Trouble shooting guide 21

7. Technical data 23

7.1 BWT PerlaMAXX S / S Bio* 23
7.2 BWT PerlaMAXX M / M Bio* 24
7.3 BWT PerlaMAXX L / L Bio* 25
7.4 BWT PerlaMAXX XL / XL Bio* 26

8. EC declaration of incorporation 27

1. Introduction

1.1 General comments

This appliance can be used by children aged from 8 years and above and by persons with reduced physical, sensory or mental capabilities or lack of experience and knowledge if they have been given supervision and instruction in the safe use of the appliance and understand the hazards involved. Children must not play with the appliance or any contents therein at any time.

Extended periods of non-use: If the property is to be left unattended for any length of time, e.g. holidays, the water softener should be bypassed/ isolated from the mains water supply by reversing the 3 valve positions shown in the installation instructions of this manual, or by correct operation of Uniconnect simple install block (depending on use).

After prolonged periods of non-use, we recommend that a manual regeneration of the softener is carried out as described in section 4.2 of this manual.

Protect from extreme temperatures:
Do not install the softener where it, or its connections (including drain and overflow lines), could be subject to temperatures below 5ºC or above 40ºC.

1.2 Manufacturer

BWT UK Ltd.
BWT House, Coronation Road
High Wycombe
Buckinghamshire, HP12 3SU
Phone: +44 / 1494 / 838 100
Fax: +44 / 1494 / 838 101
E-mail: enquiries@bwt-uk.co.uk

1.3 Safety instructions

Electrical safety – Only use the transformer / plug or battery supply (where applicable) supplied with this device.

Before use ensure that the data specification on the power supply matches the local mains electricity supply. Depending on where you sourced your device it will be supplied with the applicable plug connection (3 Pin UK, 2 pin EU or 2 pin US).

The complete power supply unit must be replaced in the event of damage to the mains cable. If in any doubt, consult a qualified electrician.

If a power failure occurs during regeneration, waste water may be flowing. Therefore the overflow connection should, and waste water drain MUST always be installed and connected to a suitable domestic waste / drain in order to avoid the risk of flooding.

Warning:
Do not use any aggressive cleaning agents. For cleaning please wipe clean with a damp cloth.

Maintenance:
The device must be isolated during installation, maintenance and repair work. Your water softener requires regular service in order to maintain performance.
Please contact your local BWT Office for details.

Please observe:
NEVER operate the device with the housing covers removed.

1.4 Intended use

This appliance is intended for domestic use in the softening, and partial softening, of domestic water supplies only. Any use other than this is not supported by the manufacturer and could be dangerous. BWT UK Ltd cannot be held liable for any damage or failure resulting from the incorrect or improper use of this appliance.

1.5 Scope of delivery

BWT PerlaMAXX water softener with: Standard delivery:

1.	Multi-way control valve with microprocessor controller
2.	Salt Storage Cabinet
3.	Drain water
4.	Blending valve
5.	Hard water inlet
6.	Softened water outlet
7.	Overflow connection
8.	Softening column with ion exchange resin

9

10

11

12

13

14

15

16

1.5 Scope of delivery

BWT PerlaMAXX water softener with: Standard delivery:

9.	Operating manual
10.	Hose clamp connection
11.	2m drain water hose
12.	AQUATEST hardness tester
13.	3 pin mains plug transformer power supply connection (UK)
	Optional Accessories:
14.	Inlet / Outlet Hoses
15.	Uniconnect simple install block
16.	C-Cell Battery Power Supply

Pictures are shown for illustrative purposes only and are subject to change without prior notice.

2. Quick Set Up Guide

2.1 Display and control elements

Note: When adjusting any setting the target value to be adjusted will flash
The 4 buttons can be used to adjust entries as shown below

The display shows:

- the current time and
- the remaining capacity in 20% increment bars

[UP]	[DOWN]	[SET][	RECHARGE]
= Moves cursor changes entries		= Confirms entries	= Recharge

Ensure you have tested and obtained your local water hardness setting following section 3.8 of this manual prior to changing the hardness setting of your softener

2.2 Standard factory settings

Your softener has been supplied preset with most of the information it needs to perform correctly. For simplicity the softener has been set to operate at an inlet water hardness of 300 parts per million (ppm) of hardness minerals in the supply water and to carry out automatic regeneration of the ion exchange media at 2:00am local time. However in order to get the best performance from your softener it is important for you to set the correct local time and actual water hardness of your supply (using the hardness test kit supplied). This will ensure that the softener calculates the correct metered water capacity of your softener in order to regenerate at the best possible time and most efficient frequency.

On first powering up the softener the digits of the display will flash while the valve rotates to service position. The valve can be heard moving and this can take a few minutes. On locating service position the display will prompt the installer to set the time and the water hardness. You will also have the opportunity to adjust the 2:00am regeneration time if required.

Once these settings have been input your softener will calculate the correct softened water capacity for your needs and start metering your water usage in order to only regenerate, and use salt, when absolutely necessary and in the correct amount.

You just need to make sure that you put some salt (BWT tablet salt is recommended) into the salt cabinet at the front of your softener, set the time and supply water hardness and your softener will do all of the work for you to provide luxury water as needed.

Go to section 2.3 to set the time and hardness settings.

2.3 Programming procedure

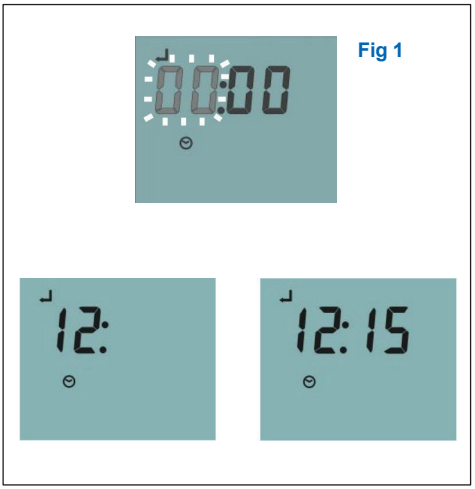

Fig 1

1. Setting the time of day

Once service position has been located the SET and CLOCK symbols will illuminate in the LCD display to prompt setting the current time.

The first two digits (00) of the display will flash prompting the installer to set the hour (Fig 1).

The value is adjusted by using the [UP], [DOWN] keys. Pressing the [SET] key enters the value. This can then be repeated to set the minute value.

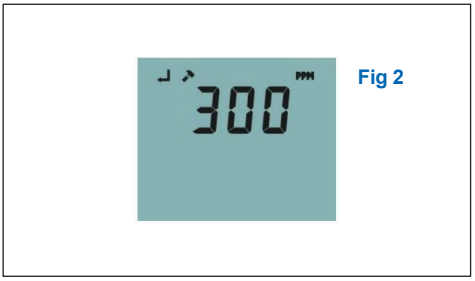

Fig 2

Once the minutes are set the display will automatically move on to the set hardness mode. The SET, HARDNESS and PPM symbols will illuminate on the LCD display. The default water hardness value of 300 will be shown **(Fig 2).**

Fig 2
Note: For some softener models the hardness may be set in degrees French or degrees German and in these cases the display will show °F or °D symbol accordingly.

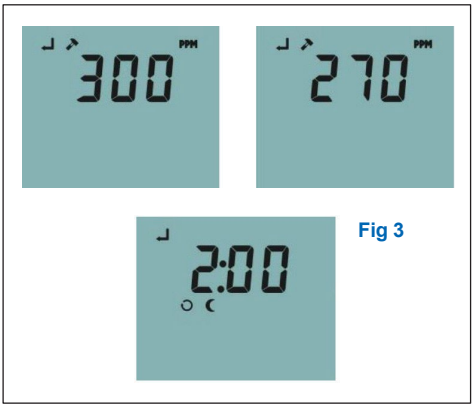

Fig 3

2. Setting the water hardness

The display default is 300 ppm (typical hardness level) which indicates a setting suitable for hard water with a value of 300 parts per million of hardness minerals. Use the [UP] [DOWN] keys to adjust the setting to match that of the one you obtained / identified using the water test kit provided with your softener.

Pressing the [SET] key once enters the hardness and moves the display to Set Recharge Time Mode. The SET, RECHARGE and TONIGHT symbols will illuminate in the LCD display and the time will show the 2:00am default setting **(Fig 3).**

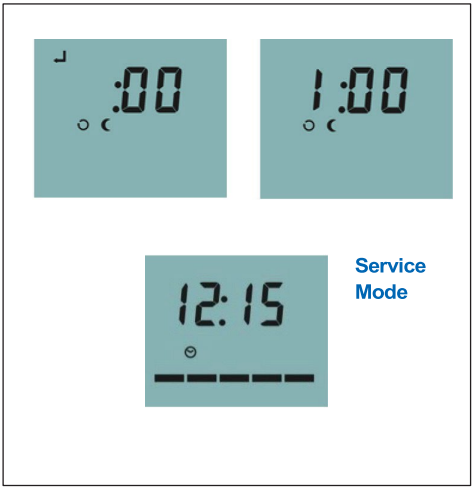

Service Mode

3. Setting the recharge time

The recharge time can be set in the same way as the current time of day in part 1 above, using the UP, Down and SET keys. For best performance the recharge time should be set at a time when least water is being used in the property as during a regeneration (or recharge) the softener will not necessarily be producing soft water.

Once the recharge time is set the softener will return to service mode and setup is complete.

NOTE: For some models an additional salt selection option will appear after setting the recharge time. If this option is present simply use the UP, DOWN and SET keys to select BS for Block Salt and CC (Care Cubes) for tablet salt as needed.
For information regarding salt please call BWT customer services team.

2.4 Display Symbol Key

Time		Litres	L
Set		Percent	%
Hardness		Per Minute	/
Turbine		Per Day	/
Flow		Low Battery	
Average	$\bar{X}$	Recharge	
Total	Σ	Tonight	
PPM	PPM	Pressure	
French Degrees (Hardness)	°F	Internal	
German Degrees (Hardness)	°D	External	

Fill

Dwell

Brine Draw

Rinse

Backwash

Frequency

Charge

Salt Start Level

Salt Used per Regeneration

Capacity

Warranty

Service

Alarm

Pass

Fail

Model

Key code

3. Installation

3.1 Installation requirements

1. Before you begin

The installation of your new water softener is straightforward. However, we would recommend that either a qualified plumber or a person with relevant plumbing experience carries out the installation. Before embarking on the installation, please ensure you have familiarised yourself with both these instructions and the components required to complete the installation.

2. Positioning the water softener

Please measure your water softener to ensure that it will fit into the area you are placing the unit. PLEASE remember to include additional space for connecting pipe work in your calculations along with the regular access that is needed for topping the unit up with salt and future service. Where possible, the distance of both the incoming water supply and nearest drain should be kept to a minimum. Two metres is an ideal distance, however, longer distances are permissible, dependent on the incoming water pressure. Please remember the weight of your new water softener will considerably increase once installed and filled with salt. Therefore, please ensure your chosen location is strong enough to support an approximate total weight of 50kg – 70kg. Your new water softener has been designed to operate efficiently and effectively with an incoming water pressure of between 1.7 to 5 bar. If your water supply is likely to fall outside these limits, then we would recommend that a booster pump or pressure reducing valve should be fitted respectively.

National guidelines and regulations:

Observe all applicable installation regulations, general guidelines, hygiene requirements, and technical specifications. The hard water to be fed into the unit must always meet the specifications of the national Drinking Water Ordinance or EU Directive 98/83/EC. The total dissolved iron and manganese may not exceed 0.1 mg/l. The hard water to be fed into the unit must always be free of air bubbles.

Frost protection and ambient temperature:

The installation site must be free of frost and kept free of chemicals, paint, solvents and fumes. The ambient temperature should not exceed 40°C, even before the machine is started. Please avoid direct heat sources, e.g. radiators and exposure to sunlight.

Electrical interference:

The emission of interference (voltage peaks, high frequency electromagnetic fields, interference voltages, voltage fluctuations by the surrounding electrical systems may not exceed the maximum values specified in EN 61000-6-3.

Data analysis of the hard water in your area:

Continuous operation of the water softener with water containing chlorine or chlorine dioxide is possible if the concentration of free chlorine/ chlorine dioxide does not exceed 0.5 mg/l. The type of pre-treatment must be determined individually.

Extended periods of non-use:

The unit should be sized according to your current water consumption. If water consumption is reduced, e.g. during holidays, a tap should be fully opened for at least 5 minutes and water run to drain before further use.

General safety:

The rated mains power (see technical data) and the requisite inlet water pressure must be present at all times. No protection against a lack of water is provided. This must be installed on-site if required. Overpressure and fluctuation protection: Attention: Water pressure must never exceed the unit‘s maximum of 5 bar.

If the network water pressure is measured higher than 4 bar (to allow for fluctuation) or you are unsure about pressure, a pressure reducer (pressure reducing valve) must be installed upstream of the unit.

During pressure fluctuations or surges, the sum of the pressure surge and the standing pressure is not to exceed the rated pressure. When installing the unit, select a location where the unit can easily be connected to the water supply network.

A connection to the waste water system **(at least DN50),** a floor drain and a separate mains socket (see technical data) must be nearby.

Overflow hose connection:
A suitable overflow hose connection is recommended to remove any overflow waste water.

Exclusion of warranty:
Non-compliance with the installation conditions and the operator responsibilities voids the warranty.

Guarantee:
In the event of a malfunction of the unit during the guarantee period, please contact your aftersales service department and quote the model type and the serial number (see technical data or the rating plate on unit).

Note: Only your local aftersales service staff may perform any works under the guarantee.
Any work performed by a third party must be directly commissioned by your aftersales service.

The warranty symbol will show in the softener display when your warranty period has ended.

3.2 Initial commissioning

1. Handing over the unit to the operator:
If there is a delay between the installation/startup of the unit and transfer to the operator, a manual regeneration must be performed. The operator must be told how the unit works as well as how to operate and inspect it. Ensure that the operator receives the installation and operating manual.

2. Inlet and outlet connections:
Please check connections and pipeline junctions for leaks.

3.3 Installation and operation considerations

Important - Never install the water softener where it, or its connections (including the drain overflow lines), will be subject to temperatures under 0°C or above 40°C. If you are planning to install the water softener above ground level e.g. In the loft, the following instructions should be strictly adhered to:

1. Loft installation
The water softener should be installed within a container of not less than 100 litre capacity, to which there should be connected an overflow pipe of not less than 20mm diameter. The overflow should be connected at the bottom of the container and not less than 15mm below the height of any electrical components mounted on the water softener. It is recommended that an anti-vacuum valve be fitted to the inlet pipework supplying the water softener.

Plumbing systems

2. Backflow prevention device
When fitted to the supply feeding a single dwelling, a check valve complying with national regulations must be fitted on the cold water feed prior to the installation. All other types of installation require the fitting of a double check valve.

3. Drinking water
Your water softener installation must include at least one drinking water tap that is not fed by the water softener. In case of low sodium diet follow the local department of health's advice concerning the use of softened water for drinking.

Note: Water that is used for mixing powdered milk for babies must only be taken from an unsoftened mains tap as some powdered milks and softened water both contain small traces of additional sodium for which young babies have a limited tolerance.

Operating pressure
If pressure more than:
4 bar install pressure reducing valve.
(UK models only).

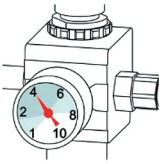

Do not operate with a pressure less than: 1.7 bar

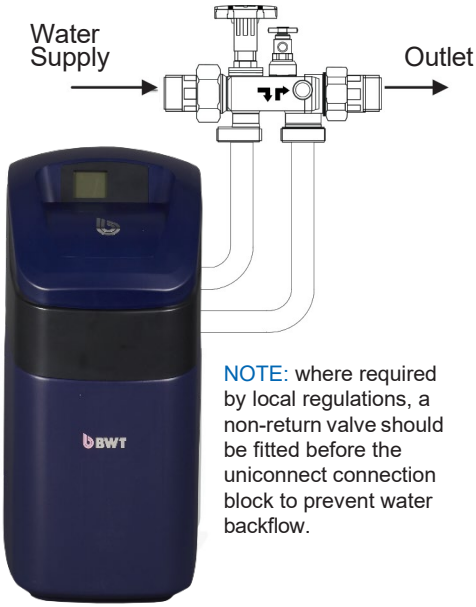

NOTE: where required by local regulations, a non-return valve should be fitted before the uniconnect connection block to prevent water backflow.

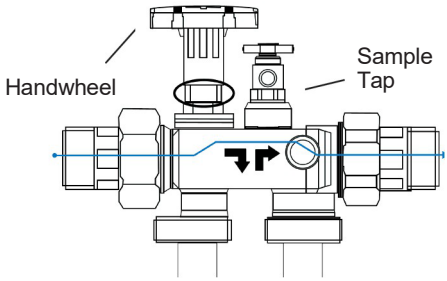

Uniconnect placed in bypass position

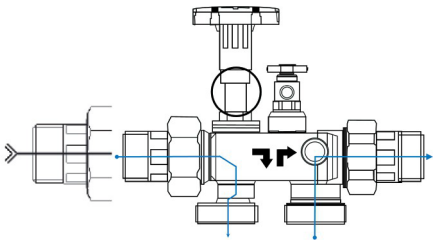

Uniconnect placed in service position

3.4 Installation Layout

The diagram on page 15 shows a standard installation layout utilising individual inlet, outlet and bypass valves. Your softener may be supplied with a Uniconnect simple softener connection device for use in place of the inlet, outlet and bypass valves Standard Installation using Uniconnect.

Standard Installation using Uniconnect

The uniconnect enables the efficient installation of your softener and allows the user to easily bypass the softener with a single operation of the uniconnect valve, isolating the softener for routine maintenance work to be carried out, whilst maintaining a water supply (unsoftened) to the property.

Operation

To interrupt the softened water supply and place the softener in bypass, turn the main handwheel on the uniconnect clockwise to the lower stop position (fully closed). In this position the uniconnect is in bypass and the small sample tap can be used to take a water sample of the mains supply water.

To resume operation, turn the main handwheel on the multiblock anticlockwise to the upper stop position (fully open). In this position the softener is in operation and the small sample tap can be used to take a sample of the treated water supply.

BATTERY POWER OPTIONS

For your convenience your PerlaMAXX Water Softener has been supplied with a power transformer suitable to your local utility supply and for best performance this should be used to power your softener. However should a mains power supply be unavailable in the installation location the softener can be powered by 2 alternative battery options:

1) 8 C Cell domestic battery box
2) Rechargeable Lithium ION Power Bank

The C Cell battery box may be included with some softener models as an option. If you require either of these battery options please contact BWT UK Customer Services for prices and availability of these optional accessories.

Standard Installation using individual Inlet, Outlet and Bypass Valves

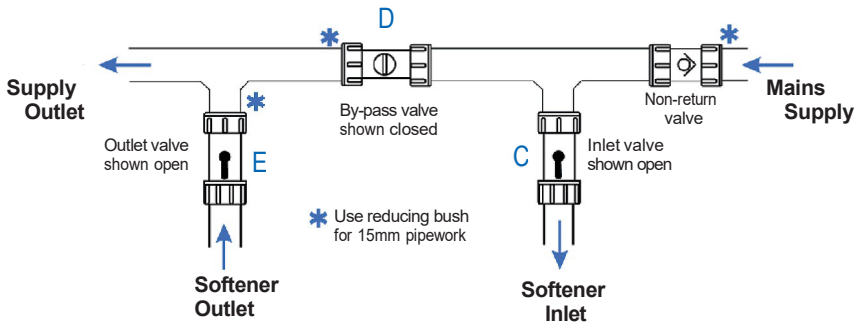

Key to the diagram:

A. Non return valve
B. Pressure reducing valve (where required)
C. Inlet valve¾"
D. Bypass valve
E. Outlet valve¾"
G. Brine storage cabinet

Key to the diagram:

H. Fixing clip
I. Waste waterhose
J. Drainage
K. Flexible hose,Overflow
O. Overflow connection ½"

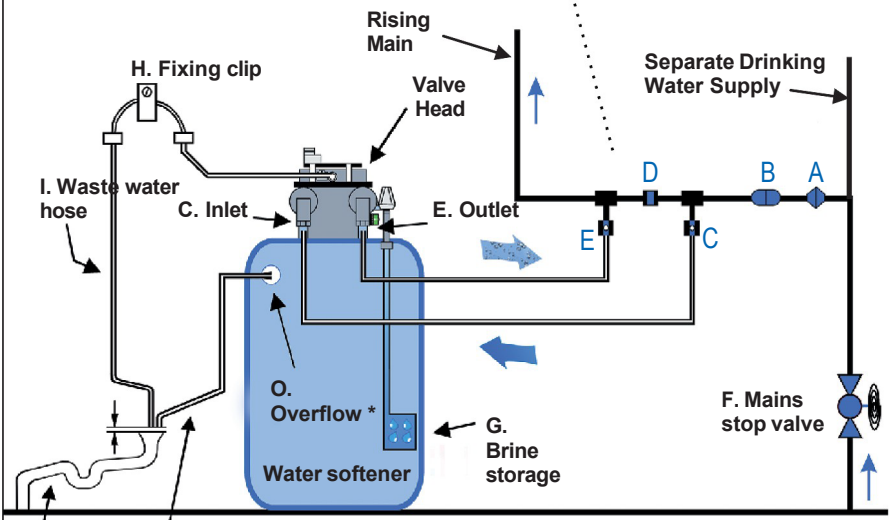

NOTE: This is an example installation diagram and does not define scope of supply

3.5 Technical overview of device:

C.	Inlet connection (feed water), for flexible hose, with thread ¾“
E.	Outlet connection (softened water), for flexible hose, with thread ¾“
G1.	Brine storage cabinet, salt filling
G2.	Connection to brine, internal connection
H.	Power Connection, power supply from transformer or battery
L.	Blend Control valve, hardness regulation
M.	Servo motor, for control valve
N.	Waste water connection, external drainage of waste water
O.	Overflow connection for flexible hose, threadless ½“

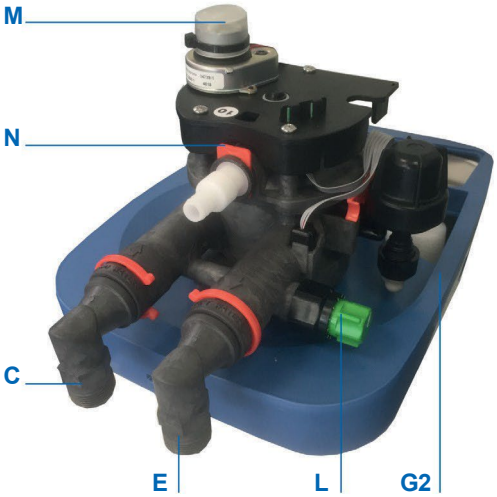

Installing your softener

1. Positioning the water softener

It is very important to establish the water pressure before installing the water softener. If the water pressure is low then the water softener may not operate effectively. If it is too high, then components inside the unit may be damaged. Water pressure should be tested with a gauge at the kitchen tap or outside tap. It should be noted that water pressure can increase at periods of low water usage e.g. overnight. If therefore, the daytime pressure measured exceeds 4 bar or if you are unsure about pressure, then a pressure reducing valve should be fitted. Where the pressure is less than 1.7 bar a booster pump may be required.

2. Inlet and outlet connections

With the bypass valve open and the inlet/outlet valves closed the unit can be connected to the plumbing system. Arrows on the inlet and outlet piping from the valve will confirm the direction of flow. Connections can be made with either conventional copper tube and fittings or the flexible hoses supplied, ensure hoses are not kinked as this may restrict flow.

3. Drain connection

Push the flexible drain hose onto the barbed connector (Drain) as shown on page 16 and secure with the clip provided. Run the drain hose to a stand pipe or to a drain. The air gap needs to be at least 20mm. Softened water will have no adverse effect on a septic tank. You can extend the drain up to 9m if you have sufficient pressure (greater than 3 bar). The drain hose must not be kinked or restricted in any way as this will cause an overflow from the brine cabinet.

Frost protection

If the drain hose or connecting pipework is likely to be subject to temperatures below 0°C it must be protected to prevent freezing. Failure to observe this precaution could lead to damage of the water softener installation and/or overflowing.

Raising the drain hose

If you have a water pressure of 3 bar or more, you can raise the drain to a maximum of 3 metres above the valve head.

4. Overflow connections

The overflow pipe (not supplied with the softener) should be connected to the elbow at the rear of the cabinet (see page 16). Run the pipe downhill to the drainage point. Take care that the overflow does not discharge where damage could occur.

If the water softener is fitted in a cellar or basement, the overflow can be run to a pumped storage tank. Do not elevate the overflow hose. Note: Do not use jointing cement on the fitting.

5. Electrical connections

For added safety, peace of mind and ease of installation, your water softener is powered by low voltage via a plug in transformer. This transformer must be connected to a fused switched socket. Attention: Plug the transformer into the socket with the switch in the OFF-position.

6. Filling the brine cabinet and regeneration

Now place the water softener salt in the brine cabinet. Use the care cubes (tablet salt) and fill the front of the cabinet until full. (You can also use block salt (UK), from your local dealer) **Notes on salt usage:** Your water softener will only perform effectively if there is sufficient salt in the brine cabinet during the regeneration process.

It is therefore essential that the salt level does not fall lower than 50mm in depth when measured from the base of the brine cabinet. N.B. The softener requires no priming, add no water to the brine tank. During regeneration, salt will not enter your water system as the salt is used in the regeneration process is rinsed safely away to drain.

7. Blending control

All machines are factory set to produce water that is soft. Note: If you prefer water which is less soft, turn the green blending knob on the left side of the valve anti-clockwise until the water meets your requirements.

NOTE: Do NOT adjust the black retaining nut at any time - this should never be touched and should only ever be hand tight. Adjusting or over-tightening could damage this component and cause the blend valve to fail.

8. Testing for the water hardness in your area

Water hardness can vary from one location to another. To determine the hardness of the water feeding your water softener (unsoftened supply) use the hardness test kit supplied.

- Fill the test bottle supplied to the fill line with water from a hard water tap.
  Add the tablet/liquid to the solution one tablet/ drop at a time.

- Shake the bottle in between and keep adding tablets to the water until the solution turns from wine red to blue, record the number of tablets as you go.
- Using the data table supplied with your kit, match up the number of tablets with the hardness. You will need this figure when programming your water softener following section 2 of this manual.

9. Switching on for the first time

Check that the inlet hoses and outlet hoses or couplings are properly connected i.e. inlet-to-inlet, outlet-to-outlet.

The bypass arrangement (see page 15) should be in the open position in example:

- the inlet- and outlet valves closed (E), (C).
- Check that the bypass valve (D) is open.
- Check that the mains stop valve (F) open.
- Check that the Brine Cabinet (G) contains salt.
- Check that the water softener is connected to the drain (J) and the overflow pipe (O) is connected.

Note: The drain and overflow must not be linked to each other.

- Gently open the inlet valve (C) so that water flows into the resin vessel.
- Connect the transformer (or battery if applicable) lead to the terminal on the rear of your water softener and turn on the power. You will hear the valve move into the service position. When the positioning process has been completed (which can take up to 5 minutes) you will hear the movement stop, the valve has now reached its service position in preparation for the programming procedure.
- Close the by-pass valve (D).
- Gently open the outlet valve (E).
- Check for leaks and take corrective action to stop leaks if required.
- Your water softener is now on line and you may start the valve programming procedure set out in the next section of this manual.

4. Operation

4.1 Function

The unit operates according to the principle of intelligent regeneration. The average capacity level of each model is preset and updates automatically to the actual consumption within 14 days by gathering data on your actual metered water usage. It is not necessary to adjust the unit for individual requirements.

Intelligent regeneration

When the unit is started, the available supply of softened water is programmed (depending on the hardness of the water). At a user-defined time (e.g. at night), the unit checks whether the remaining supply of softened water is sufficient for the following day. If this is not the case, the softening column is regenerated by only the exact percentage necessary to fully replenish the supply of softened water to 100%.

Note: With intelligent regeneration, the remaining supply of softened water is guaranteed and waste water and salt consumption is minimised. This is only possible because of the precision flowmeter, which is able to adjust the amount of brine required for each partial regeneration.

4.2 Operation

To operate effectively, your water softener must have the current time, hardness of your supply water and type of salt (where applicable) set. NOTE: Table salt is NOT suitable.

Follow the Quick Set Guide in Section 2

Pressing the **[SET]** button will toggle between user settings and Operation mode. Once set no further adjustment of the water softener is required.

Charge Bar

During normal operation there is a charge bar running along the bottom of the display. This shows the percentage of water softener capacity remaining. Immediately following a regeneration, the charge bar returns to 100%.

Resetting the display during operation

Press any key to illuminate the display, press the [SET] key once. The display will flash and indicate present time. Use the keys to alter the time as described on page 7.

Power loss

In the event of a power failure, your softener will enter a low power mode and stop the operation of the backlight and motor. If the power is restored within 15 seconds then the softener will continue to operate normally. For a power loss longer than 15 seconds the softener display will show PF (power

fail) on the display. When power is restored the softener will return to the service position and the current time will need to be reset. Individual programming parameters should be unaffected.

Flow indicator

During normal operation, a flow indicator will flash on the display at a rate of one litre per pulse when water is passing through the softener.

Cleaning

For best results use a damp cloth and a mild detergent. Do not use bleaches, solvents or spirits as they may damage the surfaces.

Manual regeneration [recharge] button

Under normal operating conditions your water softener will regenerate automatically. If however a manual regeneration is required please follow the procedure set out below.

1. Press any key to illuminate the display.
2. Momentarily pressing the button furthest to the right under the display will illuminate the Recharge Tonight symbol on the display and perform a regeneration at 2.00 a.m. regardless of the remaining water softener capacity.
3. If the button is subsequently pressed, this will clear the Recharge Tonight indicator from the display and cancel the Recharge Tonight feature.
4. If the [recharge] button is pressed down for a few seconds, the Recharge display will flash and immediately commence a regeneration cycle which cannot be cancelled.

Adding salt

Refill the salt no later than when the **salt symbol** is indicated on the display or when the salt level is 50mm above the base of the softener.

Acknowledge and reset low salt reminder:

(This function is not standard on all models). where fitted the function estimates your salt usage based on a set number of regenerations completed and then sounds an audible alarm and displays the low salt error symbol. *NOTE: this is a reminder only and cannot detect the actual salt level.* To reset the salt reminder add salt to your water softener cabinet until full and then press the SET key until the salt symbol disappears.

Reseting salt reminder if you top up with salt prior to the reminder activating.

If you top up your your water softener with salt prior to the reminder being activated. Fill the cabinet until full and then, press the UP and Down buttons together for 3 seconds the display will then show 700 and the PASSCODE icon.

Using the ↑/↓buttons, set the value to 701, then press ENTER the display will show SALt for a few seconds the salt reminder is now reset.

Clean the storage area or brine cavity with clean water if it gets dirty.

Salt usage

Your water softener is controlled by a micro-processor which constantly monitors water usage. The system will build up a history of your water requirements and calculate the most economical regeneration pattern. This will ensure a constant supply of softened water whilst maintaining high levels of water and salt efficiency. As your water softener uses a proportional brining system, more frequent regenerations do not necessarily mean high water / salt usage.

Increase in number or residents

Sudden and short changes in water usage should not affect your water softener's behaviour. If however, the number of guests staying with you increases, and your water usage patterns alter. This may cause your water softener to regenerate more often than normal. As the water usage returns to its normal level, the number of regenerations will also return to normal.

Cabinet Water Level

During normal operation the water level inside the water softener cabinet will rise and fall as required by the regeneration process. If the water softener is used within the specified operational parameters the water level should not reach the overflow connection. If however an overflow situation occurs please refer to the **troubleshooting section on page 21 to diagnose the problem.**

Following any overflow situation reduce the water level in the cabinet by manually removing the excess water and initiate a manual regeneration as described on page 19.

NB: Check the water level weekly and following any unplanned event, e.g. power failure.

4.3 Setting the hardness of blended water

To test the water hardness, allow the nearest cold water tap to run for a while and check the hardness of the blended water using the hardness test kit.

Adjust with the blending valve V until the desired value is reached.

Hardness in ppm	No. of people				
	02	03	04	05	06
150	8	7	6	5	4
200	7	6	5	4	3
250	6	5	4	3	2
300	5	4	3	2	1
350	4	3	2	1	1
400	3	2	1	1	1

= Days between regeneration (Guide Only)

5. Maintenance

5.1 Maintenance work

The operator must regularly perform the following checks to guarantee that the unit functions properly.

Check the salt and refill after use.

Check the water hardness: The hardness of drinking water and the set blended water hardness must be checked 2x annually and the hardness of the blended water must be corrected when required.

Check for leaks, visual inspection: Check connection lines and connections for leaks. Check for dirt in the regenerative storage area and brine cavity every two months and clean and flush with clear water if necessary.

The intervals between checks are recommended minimums and must be adjusted according to site conditions.

5.2 Operator responsibilities

All technical equipment requires regular servicing in order to guarantee optimal functionality.

Keep yourself up to date with regard to the quality and pressure ratio of the water which is to be treated. If the water quality changes, the settings may need to be changed. Consult a specialist if necessary.

Regular checks by the operator are required for the warranty and proper functioning of the unit. The water softener must be inspected regularly in accordance with the conditions of operation and use.

Operator check intervals:
After use: Refill regeneration salt
2x Annually: Check pressure
2x Annually: Check water quality
1x Annually: Clean brine container
If you are using a battery power supply:
After use / weekly: Check for low battery symbol

If illuminated – change battery.

5.3 Maintenance & wearing parts

Wearing parts must also be replaced within the prescribed maintenance intervals in order to guarantee functionality and fulfil the warranty conditions. The water softener should be serviced once a year.

Contact BWT Customer Service when your softener displays the service symbol on the display to arrange your service.

Wearing parts may only be replaced by qualified personnel (contact BWT customer service team). The BWT customer service team offer a range of maintenance and service options for your softener.

Cleaning information: Do not use alcohol or alcohol based cleaning agents, otherwise the plastic surfaces of the device will be damaged.

5.4 Disposal

At the end of product life please contact BWT Customer Services to arrange a new replacement for your softener Disposal of your softener and any electrical parts should only be carried out at authorised WEEE recycling centres.

6. Fault finding

6.1 Trouble shooting guide

Attention:
If your water softener is not performing as it should, please run through the check list below.

Checklist	Solution	Page
Problem: Water still remains hard.		
Is there a minimum of 50mm of salt in the brine cabinet?	Fill the brine cabinet with salt.	17.6
Is the power on?	Switch the power on and check connections. For battery operation, change the battery.	14,17.5
Is the softener online?	Close the by-pass valve and open the inlet and outlet valves or operate uniconnect.	14, 15, 18
Is the hardness setting correct?	Reset the hardness if required.	9
Problem: Water level in brine cabinet reaches overflow.		
Is the line pressure within the specification of the water softener?	Connect a pressure gauge to a water outlet and check the pressure is between: 1.7 - 5.0 bar for UK.	12,13
Pressure falls outside of the water softener specification.	Fit a pressure reducing valve or booster pump as required. (see note below).	12, 13, 17.1
Is there flow through the drain line?	Check the drain line is not kinked, blocked or frozen.	15, 17.3
Has there been a power interruption?	Check that the power is on and the connections are secure.	14, 17.5
Problem: No water.		
Is the mains stop valve open?	Open the mains stop valve.	15
Are the inlet and outlet valves of the water softener open?	Open the inlet and outlet valves to the water softener or operate uniconnect.	14, 15, 18

Note:
If any overflow situation occurs or if any of the above requires action reduce the water level by half and initiate a regeneration by pressing and holding the **manual regeneration key [RECHARGE] for more than six seconds.**

Attention:
If your water softener is not performing as it should, please run through the check list below.

Checklist	Solution	Page
Problem: Water runs from the drain constantly.		
Is the unit in recharge mode?	If yes, this is normal, wait until the recharge is complete.	10
Is the power on?	Switch the power on and check connections. For battery operation, change the battery.	14,17.5
Problem: Excessive salt usage.		
Check the hardness setting.	Reduce the hardness if incorrect.	9
Problem: Electronic Display.		
The display shows error code: **"Err 1"** audible alarm sounds, (see note below).	Check all the connections are secure. Turn the power off for 15 seconds until PF is no longer displayed then turn back on, allow the system to reset.	
OPTIONAL: The display shows error code: **"SALt",** audible alarm sounds.	The low salt alarm is active. Fill the brine cabinet with salt. Pressing the **[SET]** key will reset the salt alarm to full capacity of salt.	17, 19
Is the digital display blank?	Check the power is turned on and all the connections are secure. Change the battery.	14, 17.5
Problem: Unit regenerates at the wrong time.		
Is the present time correct?	Reset the present time.	18

Note:
If the home position is **not detected within 10 minutes,** the main display will show an **"Err 1"** message to indicate a controller error and an audible alarm will sound. **The error condition can only be cleared by removing and re-applying the power.**

Attention:
If problem persists, please call your local dealer or after sales service team.

7. Technical data

7.1 BWT PerlaMAXX 10*

BWT PerlaMAXX	Type	10 Bio
Nominal connection (outside thread)	BSP	¾“ (DN 20)
Nominal flow rate in accordance with EN 14743	l/h	1440
Operating pressure (min./max.)	bar	1.7 / 5.0
Operating flow range (min./max.)	l/min	5 / 50
Maximum flow rate *	l/min	80
Quantity of ion-exchange resin	l	10
Nominal capacity (EN 14743) /(CaCO3 mmol/l)	m³x°dH/mol/ppm	26 / 4.6 / 460
Capacity salt reservoir	kg	12
Salt consumption per regeneration	kg	1.5
Water consumption per regeneration	l	85
Protection class	IP	51
Water temperature (min./max.)	°C	5 /30
Ambient temperature (min./max.)	°C	5 /40
Electrical connection	V / Hz	230 / 50
Dimensions: Width x depth x height (W x D2 x H)	mm	276 x 470 x 526
Connection height (A) / Overflow height (S)	mm	345 / 250
Operating weight, approx.	kg	40

*Tested with HiFlow connection – continuous operation at this level may affect softening efficiency

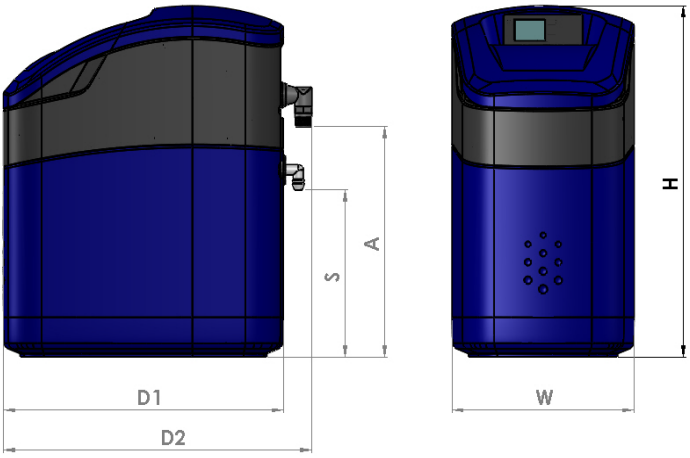

7.2 BWT PerlaMAXX 20*

BWT PerlaMAXX	Type	20 Bio
Nominal connection (outside thread)	BSP	¾“ (DN 20)
Nominal flow rate in accordance with EN 14743	l/h	1680
Operating pressure (min./max.)	bar	1.7 / 5.0
Operating flow range (min./max.)	l/min	5 / 50
Maximum flow rate *	l/min	80
Quantity of ion-exchange resin	l	20
Nominal capacity (EN 14743) /(CaCO3 mmol/l)	m³x°dH/mol/ppm	60 / 10.7 / 1070
Capacity salt reservoir	kg	24
Salt consumption per regeneration	kg	2.5
Water consumption per regeneration	l	125
Protection class	IP	51
Water temperature (min./max.)	°C	5 /30
Ambient temperature (min./max.)	°C	5 /40
Electrical connection	V / Hz	230 / 50
Dimensions: Width x depth x height (W x D2 x H)	mm	276 x 470 x 803
Connection height (A) / Overflow height (S)	mm	622 / 527
Operating weight, approx.	kg	65

*Tested with HiFlow connection – continuous operation at this level may affect softening efficiency

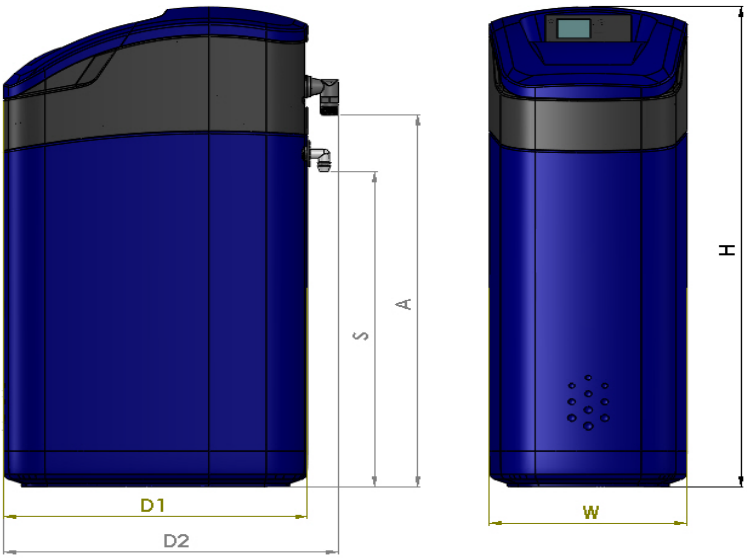

EC declaration of incorporation

BWT UK Ltd.
BWT House
Coronation Road
High Wycombe
Buckinghamshire, HP12 3SU

The company BWT UK Ltd. declares that the product domestic water softener with the following specifications:

Trade name of product	Type of product	Model
• BWT PerlaMAXX	S / S BIO	10 litres
• BWT PerlaMAXX	L / L BIO	20 litres

with a serial number higher than: 1105 000101

and with a production and reference no.: see rating plate & technical specifications

have been designed, manufactured and assembled according to the following EC Directives (guidelines):

2014/35/EU	Guideline for low voltage (LVD)
2014/30/EU	Guideline for electromagnetic compatibility (EMC)

Note: Do not perform any changes, extension and reconstruction work on the device which might impair safety without the approval of BWT UK Ltd., otherwise this declaration loses its validity.

Note: Please ensure that all conditions of the installation manual are met

Buckinghamshire, 30th July 2025

Ian Threadgill
General Manager (Supply Chain)

Manufacturer: BWT UK Ltd. – Coronation Road – Buckinghamshire, HP12 3SU

Further information available here:

BWT UK Ltd.
Suite G, Artisan,
Hillbottom Road, High Wycombe,
Buckinghamshire, HP12 4HJ
Phone: +44 / 1494 / 838 100
Fax: +44 / 1494 / 838 101
E-mail: enquiries@bwt-uk.co.uk

bwt.com

BWT
BEST WATER TECHNOLOGY